LEDCONN

— Be the FOCUS —

DRIVERS & CONTROLS

RGB

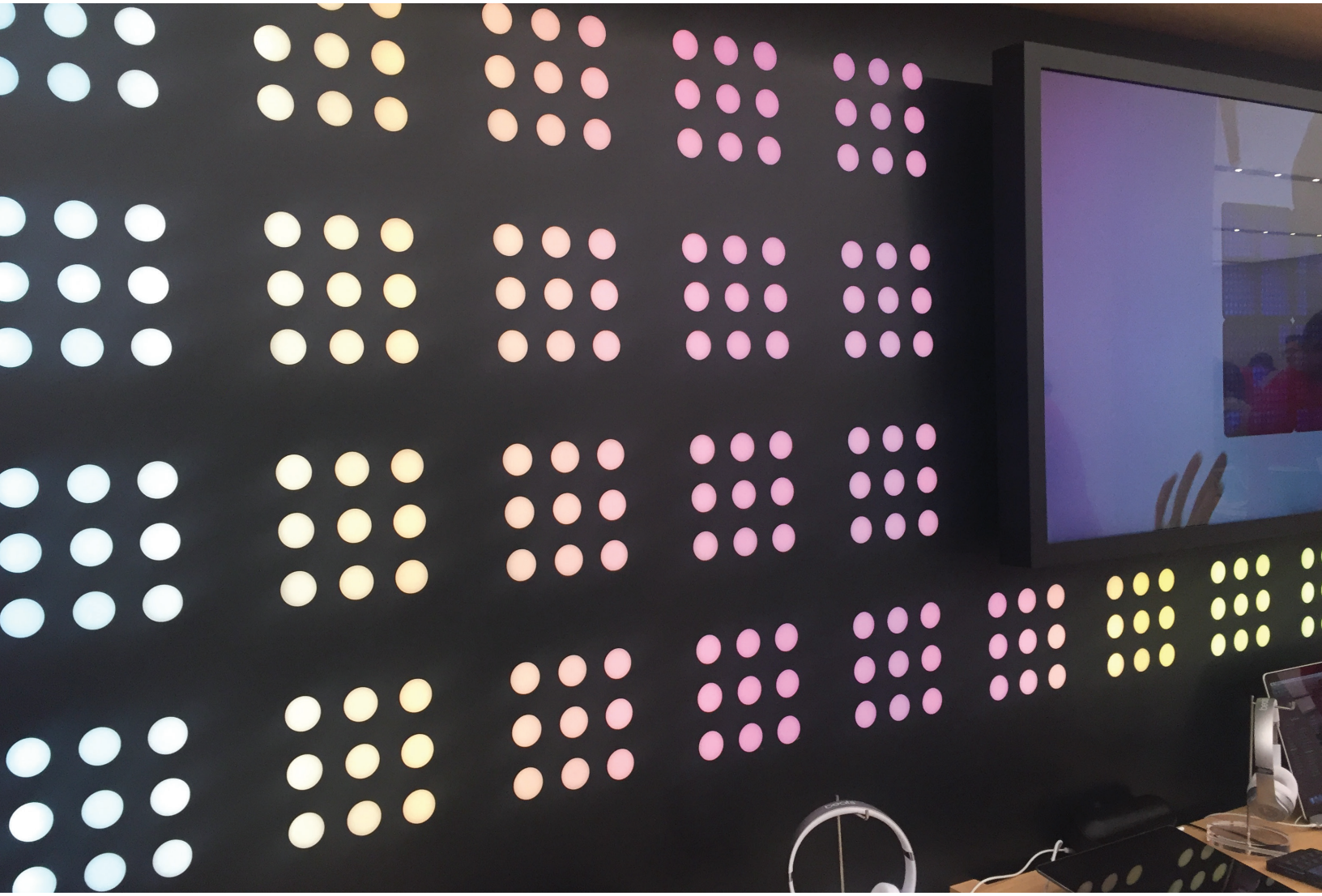

A guide on wiring, luminaire compatibility, and product availability

LEDCONN — Be the FOCUS —

301 Thor Place, Brea, CA 92821 | **tel** (714) 256-2111 | **fax** (714) 256-2118 | sales@ledconn.com | **www.ledconn.com**

Specifications are subject to change without notice. © 2023 LEDCON CORP. All Rights Reserved.

PSS.23.06.R1

TABLE OF CONTENTS

WIRING DIAGRAMS 3-25
Mini RF Controller
Simple WiFi Controller
4-in-1 WiFi Controller
RF Controller
Touch Dial Controller
DMX
DALI
Home or Building Control System
Load Compatibility

AVAILABLE DRIVERS & CONTROLS 26-30
Controls
UL Class 2 Power Supplies

ELECTRICAL 101 31-36
Glossary
FAQs

301 Thor Place, Brea, CA 92821 | **tel** (714) 256-2111 | **fax** (714) 256-2118 | sales@ledconn.com | **www.ledconn.com**

Specifications are subject to change without notice. © 2023 LEDCON CORP. All Rights Reserved.

RGB WIRING GUIDELINES & DIAGRAMS

MINI RF CONTROLLER

Control System Configuration

Simple mini RF controller and dimmer features a selection of 20 pre-set static colors, and 19 pre-set dynamic color changing modes.

Features

- **SIMPLE** — Easy Control
- Plug & Play
- **FIXED** — Pre-Set Programming
- $ — Cost-Effective

INTERFACE +	POWER +	CONTROLS: BRAIN	CONTROLS: HARDWARE +	COMPATIBLE LOAD/LIGHT SOURCE
	Pick one			*Pick your load / light source*
RGB Mini Simple RF Remote	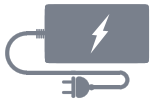 DC12V DC24V Plug-in Adapter	RGB Mini LED Controller	N/A	Select the compatible lighting product based on the recommendations on the Load Compatibility table on p.25.

Wiring Guidelines & Diagrams

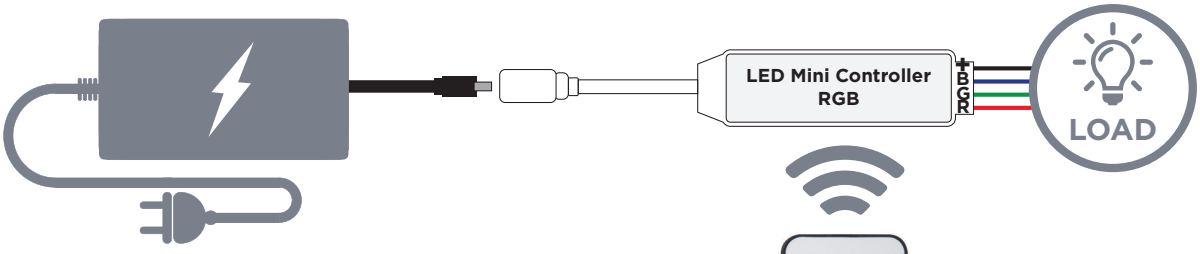

Constant Voltage Power Supply

Mini RF Remote

Specifications are subject to change without notice. © 2023 LEDCON CORP. All Rights Reserved.

SIMPLE WIFI CONTROLLER

Control System Configuration

WIFI RGB controller allows for operation with smart devices (not provided), IR remote, or ALEXA (not provided). Features a selection of 16 pre-set static colors, color and mode customization, and brightness and speed control.

Features

- **SIMPLE** — Easy Control
- WiFi
- Plug & Play
- **FIXED** — Pre-Set Programming
- Cost-Effective

INTERFACE +	POWER +	CONTROLS: BRAIN	CONTROLS: HARDWARE +	COMPATIBLE LOAD/LIGHT SOURCE
Pick one	*Pick one*	*Pick one*	*Pick one*	*Pick your load / light source*
RGB IR Remote	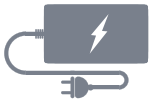 DC12V DC24V Plug-in Adapter	RGB Simple Wifi Controller	N/A	Select the compatible lighting product based on the recommendations on the Load Compatibility table on p.25.
Smart Device *WiFi enabled tablet/phone (not provided)*	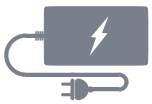 DC12V DC24V Plug-in Adapter	RGB Simple Wifi Controller	N/A	

301 Thor Place, Brea, CA 92821 | **tel** (714) 256-2111 | **fax** (714) 256-2118 | sales@ledconn.com | **www.ledconn.com**
Specifications are subject to change without notice. © 2023 LEDCON CORP. All Rights Reserved.

SIMPLE WIFI CONTROLLER

Wiring Guidelines & Diagrams

WIFI CONTROLLER WITH IR REMOTE

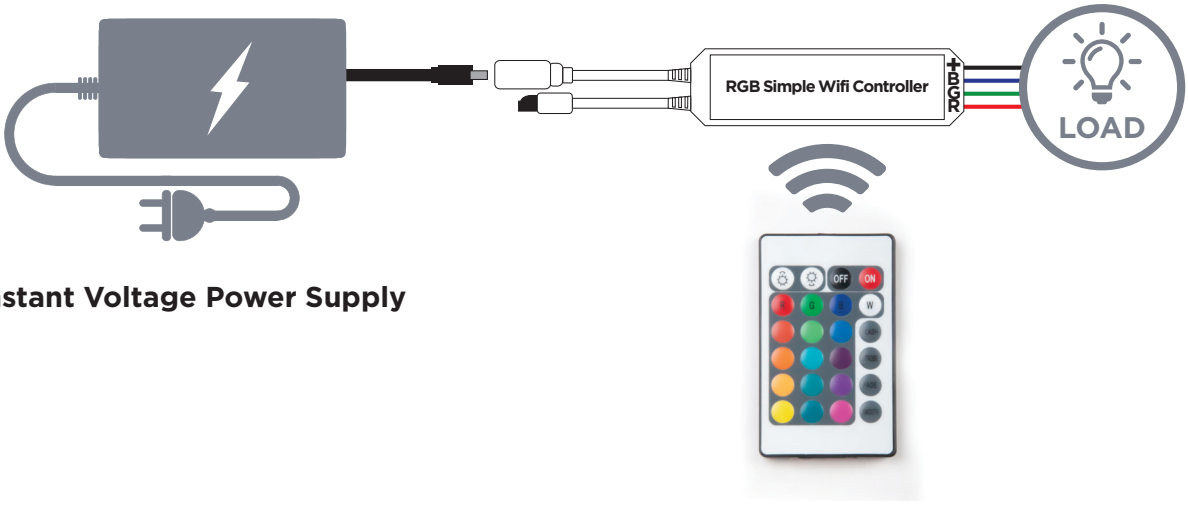

Constant Voltage Power Supply

RGB IR Remote

WIFI CONTROLLER WITH SMART DEVICE

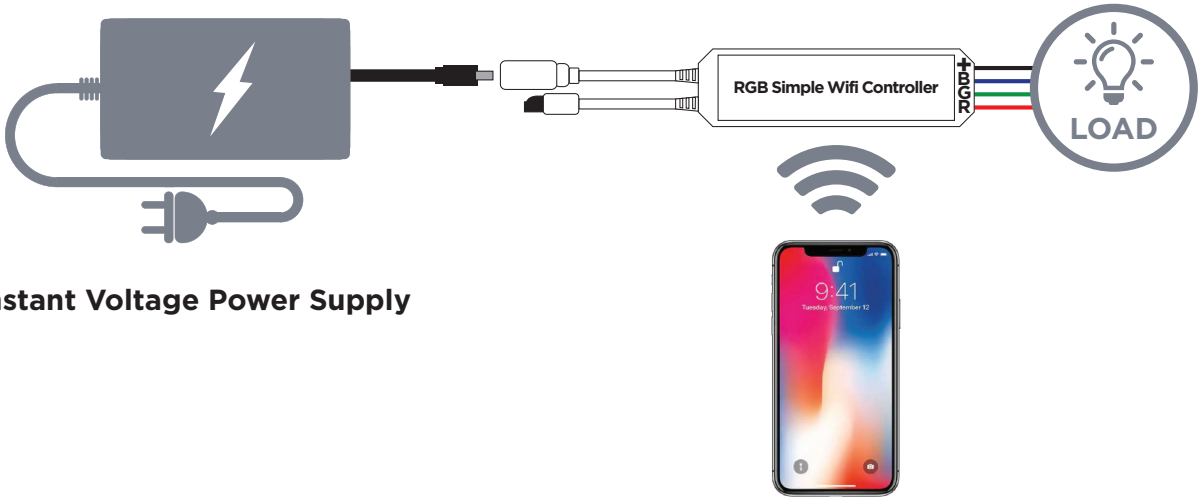

Constant Voltage Power Supply

Smart Device

301 Thor Place, Brea, CA 92821 | **tel** (714) 256-2111 | **fax** (714) 256-2118 | sales@ledconn.com | **www.ledconn.com**
Specifications are subject to change without notice. © 2023 LEDCON CORP. All Rights Reserved.

4-IN-1 WIFI CONTROLLER

Control System Configuration

RGB 4-in-1 controller allows for operation with smart devices (not provided) or IR remote. Features 12 pre-set RGB modes, and 12 customizable RGB DIY modes.

Features

Scalable

WiFi

Hardwired

Pre-set Programming

Programmable

Investment

INTERFACE +	POWER +	CONTROLS		+	COMPATIBLE LOAD/LIGHT SOURCE
		BRAIN	HARDWARE		*Please confirm custom lighting compatibility with LEDCONN beforehand.*
Pick one	*Pick one*	*Pick one*	*Pick one*		*Pick your load / light source*
4-in-1 Wifi Remote	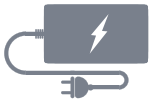 DC12V DC24V Plug-in Adapter	4-in-1 Wifi Controller	4-in-1 Wifi Responder		Select the compatible lighting product based on the recommendations on the Load Compatibility table on p.25.
Smart Device *WiFi enabled tablet/phone (not provided)*	DC12V DC24V Electronic LED Driver	4-in-1 Wifi Controller	4-in-1 Wifi Responder		

301 Thor Place, Brea, CA 92821 | **tel** (714) 256-2111 | **fax** (714) 256-2118 | sales@ledconn.com | **www.ledconn.com**
Specifications are subject to change without notice. © 2023 LEDCON CORP. All Rights Reserved.

4-IN-1 WIFI CONTROLLER

Wiring Guidelines & Diagrams

4-IN-1 WIFI CONTROLLER W/REMOTE

CONTROLLER SYSTEM

4-in-1 Wifi Remote

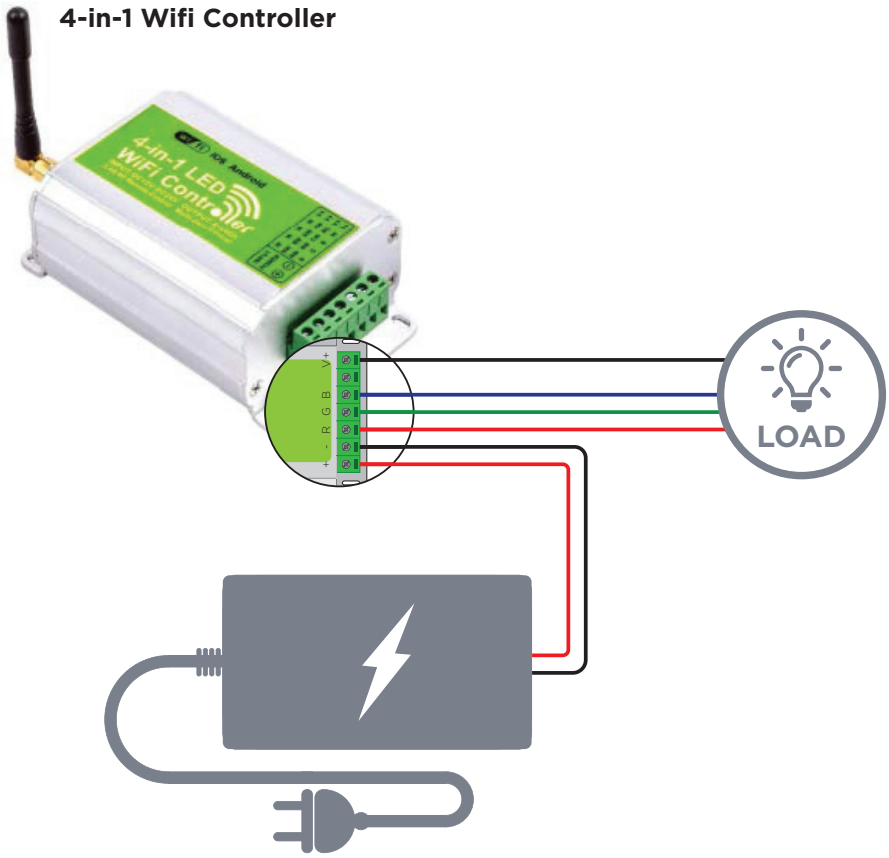

Constant Voltage Power Supply

RESPONDER SYSTEM

Constant Voltage Power Supply

4-in-1 Wifi Receiver

ONE CONTROLLER SYSTEM CAN SUPPORT UP TO 11 RESPONDER SYSTEMS CHAINED TO THE 4IN1 CONTROLLER.

Responder systems require a controller system to operate.

301 Thor Place, Brea, CA 92821 | **tel** (714) 256-2111 | **fax** (714) 256-2118 | sales@ledconn.com | **www.ledconn.com**
Specifications are subject to change without notice. © 2023 LEDCON CORP. All Rights Reserved.

4-IN-1 WIFI CONTROLLER

Wiring Guidelines & Diagrams

4-IN-1 WIFI CONTROLLER W/SMART DEVICE

CONTROLLER SYSTEM

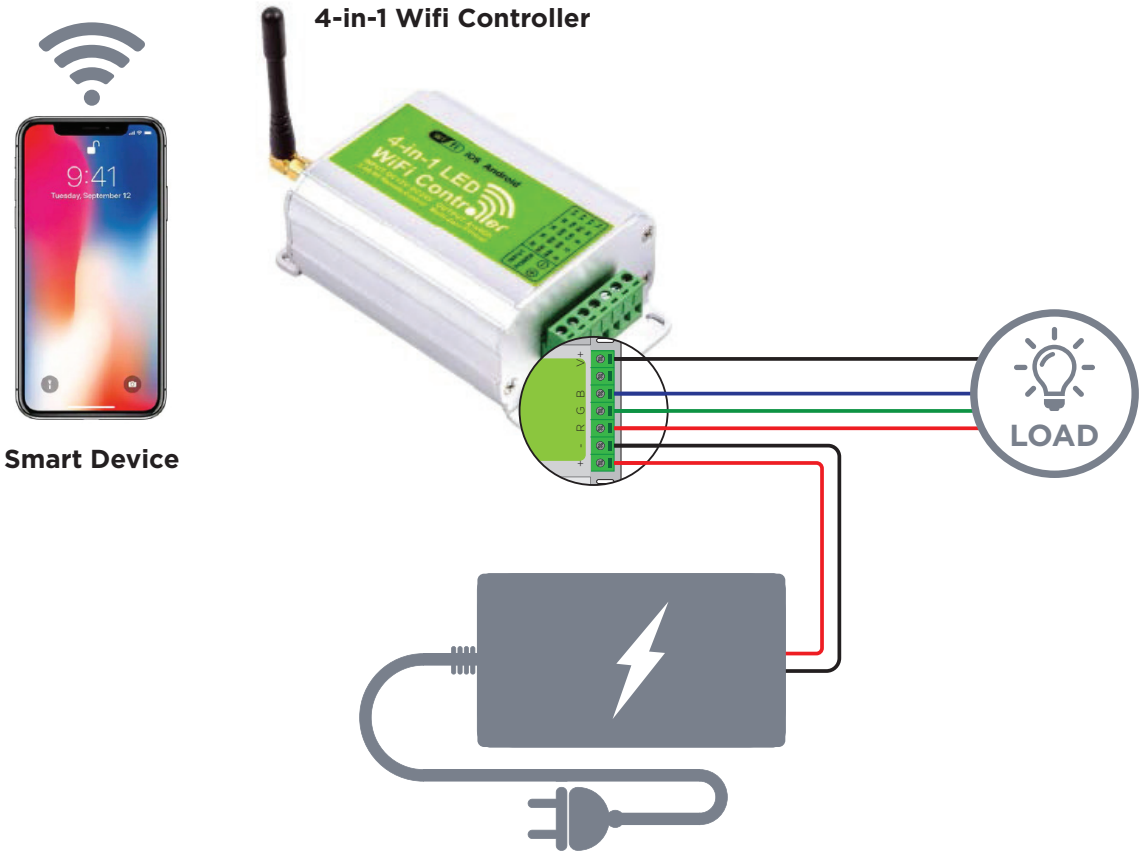

RESPONDER SYSTEM

ONE CONTROLLER SYSTEM CAN SUPPORT UP TO 11 RESPONDER SYSTEMS CHAINED TO THE 4IN1 CONTROLLER.

Responder systems require a controller system to operate.

301 Thor Place, Brea, CA 92821 | **tel** (714) 256-2111 | **fax** (714) 256-2118 | sales@ledconn.com | **www.ledconn.com**
Specifications are subject to change without notice. © 2023 LEDCON CORP. All Rights Reserved.

RF CONTROLLER

Control System Configuration

RF RGB Controller with RF remote for controlling and dimming RGB LED fixtures. Features a selection of 8 pre-set static colors, and 6 pre-set dynamic color changing modes. Load capacity and signal extension can be increased with addition of RF Amplifiers.

Features

Scalable

Hardwired

Pre-Set Programming

Moderately Priced

INTERFACE +	POWER +	CONTROLS		+	COMPATIBLE LOAD/LIGHT SOURCE
		BRAIN	HARDWARE		*Please confirm custom lighting compatibility with LEDCONN beforehand.*
Pick one	*Pick one*	*Pick one*	*Pick one*		*Pick your load / light source*
	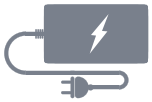				
RF Remote	DC12V DC24V Plug-in Adapter	RGB LED Controller	RF Amplifier *for chaining multiple amplifiers to the main controller*		
RF Remote	DC12V DC24V Electronic LED Driver	RGB LED Controller	RF Amplifier *for chaining multiple amplifiers to the main controller*		

Select the compatible lighting product based on the recommendations on the Load Compatibility table on p.25.

301 Thor Place, Brea, CA 92821 | **tel** (714) 256-2111 | **fax** (714) 256-2118 | sales@ledconn.com | **www.ledconn.com**
Specifications are subject to change without notice. © 2023 LEDCON CORP. All Rights Reserved.

RF CONTROLLER

Wiring Guidelines & Diagrams

RF CONTROLLER WITH AMPLIFIER CONTROLLER + RESPONDER SYSTEM

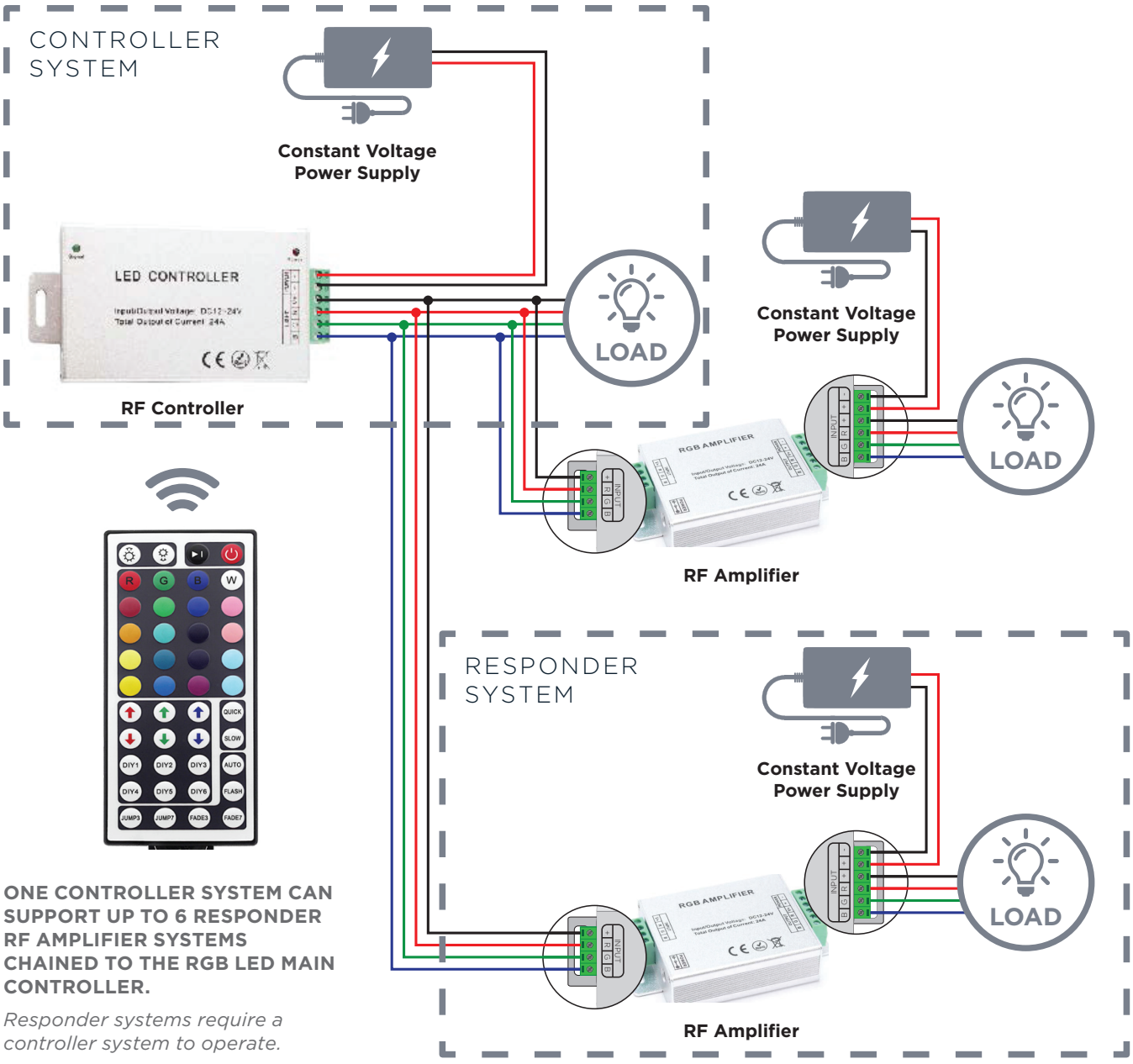

ONE CONTROLLER SYSTEM CAN SUPPORT UP TO 6 RESPONDER RF AMPLIFIER SYSTEMS CHAINED TO THE RGB LED MAIN CONTROLLER.

Responder systems require a controller system to operate.

301 Thor Place, Brea, CA 92821 | **tel** (714) 256-2111 | **fax** (714) 256-2118 | sales@ledconn.com | **www.ledconn.com**
Specifications are subject to change without notice. © 2023 LEDCON CORP. All Rights Reserved.

TOUCH DIAL CONTROLLER

Control System Configuration

Touch dial controller with RGB touch dial remote controller includes color selection wheel for a wide range of color options. Features 7 pre-set static colors, 4 pre-set dynamic modes, speed, and brightness adjustment.

Features

- **Scalable**
- **HARD WIRED** — **Hardwired**
- **FIXED** — **Pre-Set Programming**
- **$$** — **Moderately Priced**

INTERFACE +	POWER +	CONTROLS		+	COMPATIBLE LOAD/LIGHT SOURCE
		BRAIN	HARDWARE		*Please confirm custom lighting compatibility with LEDCONN beforehand.*
Pick one	*Pick one*	*Pick one*	*Pick one*		*Pick your load / light source*
RGB Touch Dial Remote	DC12V DC24V Electronic LED Driver	Touch Dial Main Controller	Additional touch dial controller *for chaining multiple responder systems to the main controller*		Select the compatible lighting product based on the recommendations on the Load Compatibility table on p.25.

Specifications are subject to change without notice. © 2023 LEDCON CORP. All Rights Reserved.

TOUCH DIAL CONTROLLER

Wiring Guidelines & Diagrams

TOUCH DIAL CONTROLLER CONTROLLER + RESPONDER SYSTEM

MAIN CONTROLLER SYSTEM

RGB Touch Dial Remote

ADDING MULTIPLE LOAD RESPONDER SYSTEMS

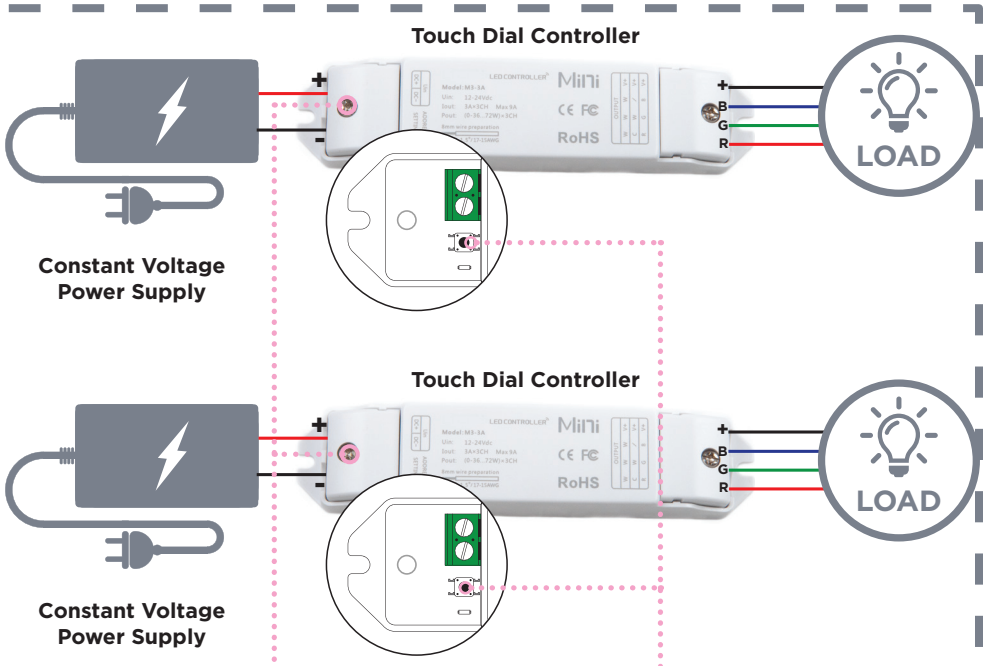

TO CONNECT RESPONDERS TO REMOTE & MAIN CONTROLLER: 1) REMOVE SCREW 2) PRESS THIS BUTTON

To sync multiple responders and use one remote as the main controller, remove the screw on the left side of the main controller and press the button inside.

Up to 10 additional responder systems may be programmed to the touch dial remote and main touch dial controller.

301 Thor Place, Brea, CA 92821 | **tel** (714) 256-2111 | **fax** (714) 256-2118 | sales@ledconn.com | **www.ledconn.com**
Specifications are subject to change without notice. © 2023 LEDCON CORP. All Rights Reserved.

DMX

Control System Configuration

The Nicolaudie DMX controller enables the user to create lighting shows with ease and organization, programmable from a PC or MAC using Nicolaudie control software. Features 2 dynamic controls options, live and stand-alone mode. Live mode enables changes and trigger cues for scenes and different lighting parameters from a connected personal computer. Stand-alone mode enables recording and replaying programmed DMX values without the need of an actively connected computer.

Features

Scalable

Hardwired

DMX

Programmable

Investment

OPTION 1 **WITH DMX DECODER**

INTERFACE +	POWER +	CONTROLS MAIN	CONTROLS RESPONDER +	COMPATIBLE LOAD/LIGHT SOURCE *Please confirm custom lighting compatibility with LEDCONN beforehand*
Pick one	*Pick one*	*Pick one*	*Pick one*	*Pick your load / light source*
Nicolaudie Control Software *for Live Control*	DC12V DC24V Electronic LED driver	Nicolaudie DMX controller	3- or 4- Channel DMX Decoder *chain as many as needed to the DMX controller (max 32 decoders per daisy chain)*	
DMX Controller powered by a 5V AC/DC USB Adapter *Stand alone mode requires upload of programs onto the controllers integrated flash memory.*	DC12V DC24V Electronic LED driver	Built-in to the DMX Controller Interface	3- or 4- Channel DMX Decoder *chain as many as needed to the DMX controller (max 32 decoders per daisy chain)*	Select the compatible lighting product based on the recommendations on the Load Compatibility table on p.25.
DMX Wall Switch/ Wall Mount Provided by Others	DC12V DC24V Electronic LED driver	Built-in to the DMX Controller Interface	3- or 4- Channel DMX Decoder *chain as many as needed to the DMX controller (max 32 decoders per daisy chain)*	

Specifications are subject to change without notice. © 2023 LEDCON CORP. All Rights Reserved.

DMX

Wiring Guidelines & Diagrams

OPTION 1 **LIVE OR STAND ALONE WITH DMX DECODER**

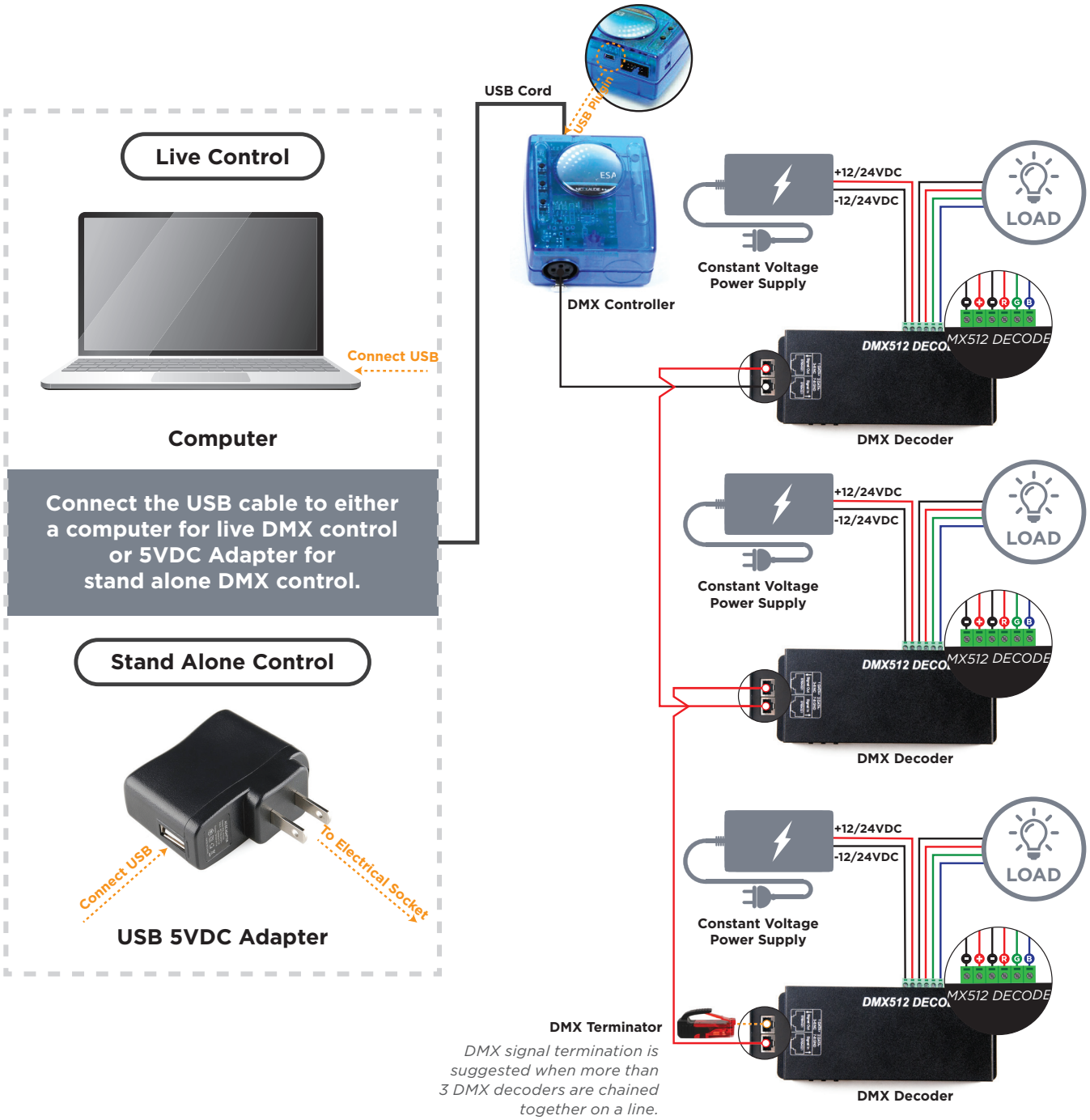

301 Thor Place, Brea, CA 92821 | **tel** (714) 256-2111 | **fax** (714) 256-2118 | sales@ledconn.com | **www.ledconn.com**
Specifications are subject to change without notice. © 2023 LEDCON CORP. All Rights Reserved.

DMX

Wiring Guidelines & Diagrams

OPTION 1 **DMX WALL SWITCH / MOUNT WITH DMX DECODER**

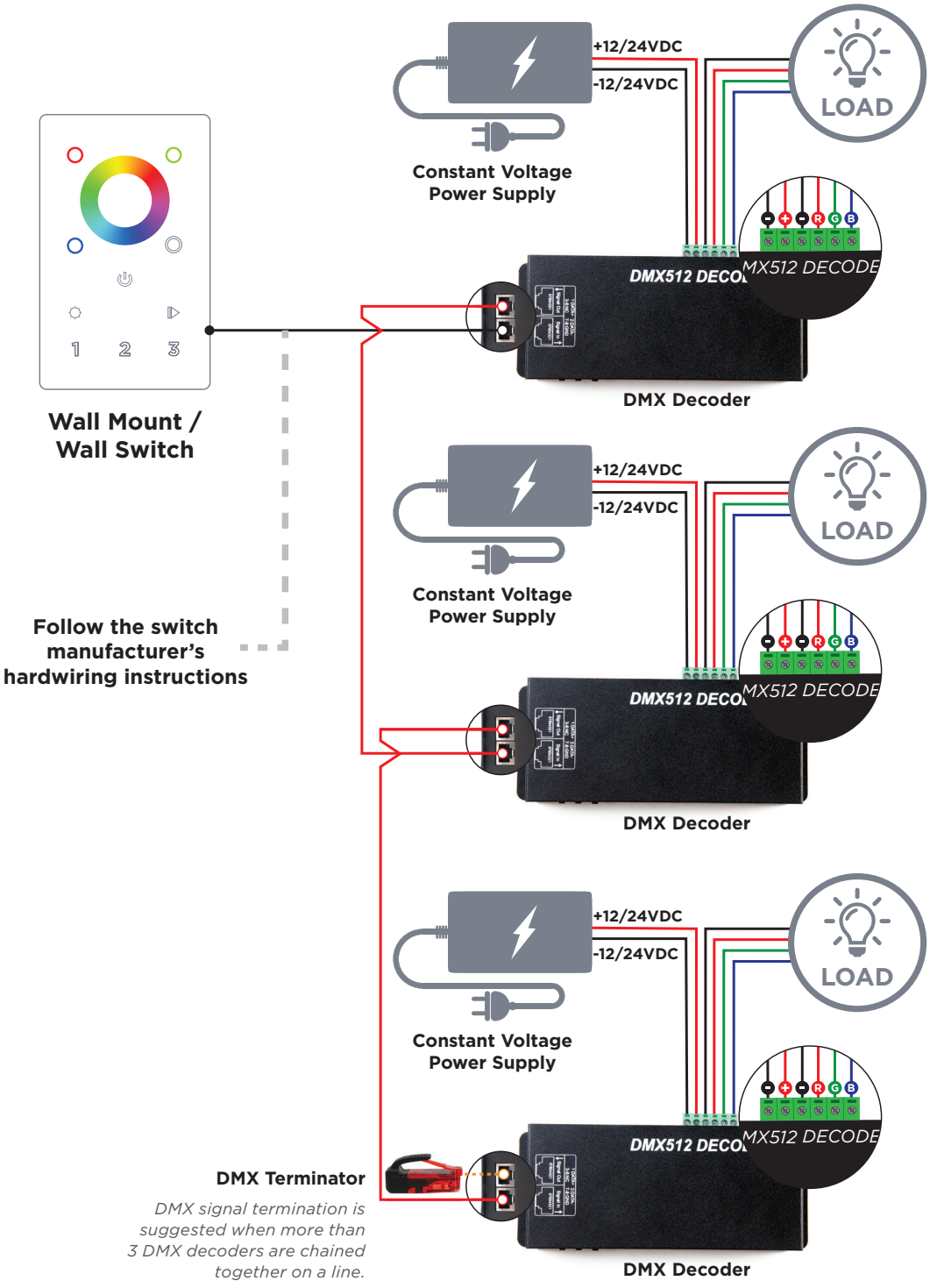

301 Thor Place, Brea, CA 92821 | **tel** (714) 256-2111 | **fax** (714) 256-2118 | sales@ledconn.com | **www.ledconn.com**
Specifications are subject to change without notice. © 2023 LEDCON CORP. All Rights Reserved.

DMX

Control System Configuration

DMX LED driver with integrated DMX decoder delivers both power and control in a single package. The DMX LED driver outputs 12VDC or 24VDC constant voltage up to 4 channels.

OPTION 2 **WITH INTEGRATED DMX DRIVER**

INTERFACE +	POWER +	CONTROLS		+	COMPATIBLE LOAD/LIGHT SOURCE
		MAIN	RESPONDER		*Please confirm custom lighting compatibility with LEDCONN beforehand*
Pick one	*Pick one*	*Pick one*	*Pick one*		*Pick your load / light source*
Nicolaudie Control Software *for Live Control*	DC12V DC24V — DMX driver	Nicolaudie DMX controller	N/A		
DMX Controller powered by a 5V AC/DC USB Adapter *Stand alone mode requires upload of programs onto the controllers integrated flash memory.*	DC12V DC24V — DMX driver	Built-in to the DMX Controller Interface	N/A		Select the compatible lighting product based on the recommendations on the Load Compatibility table on p.25.
DMX Wall Switch/ Wall Mount Provided by Others	DC12V DC24V — DMX driver	Built-in to the DMX Controller Interface	N/A		

Specifications are subject to change without notice. © 2023 LEDCON CORP. All Rights Reserved.

DMX

Wiring Guidelines & Diagrams

OPTION 2 **LIVE OR STAND ALONE WITH DMX DRIVER**

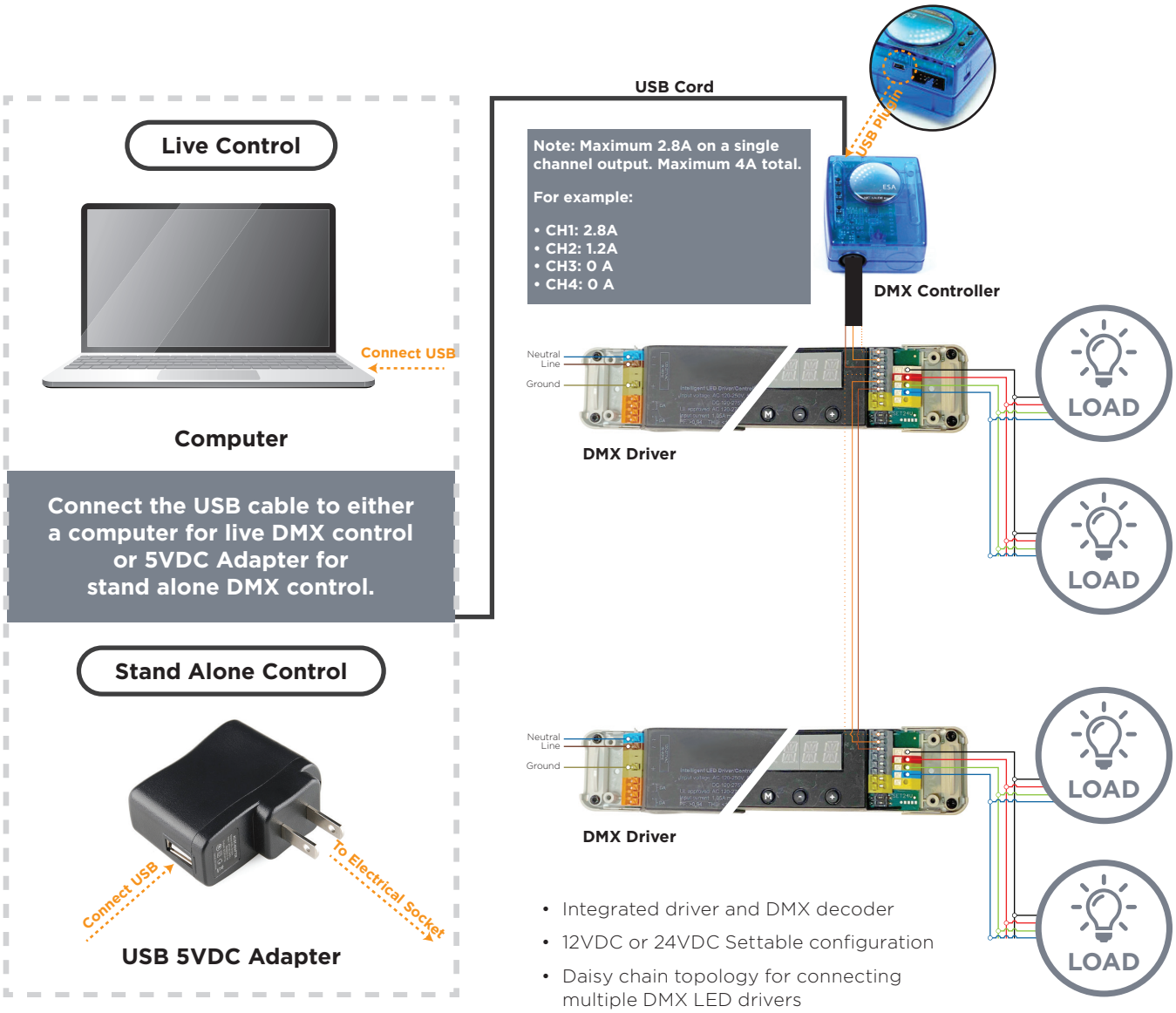

- Integrated driver and DMX decoder
- 12VDC or 24VDC Settable configuration
- Daisy chain topology for connecting multiple DMX LED drivers

Specifications are subject to change without notice. © 2023 LEDCON CORP. All Rights Reserved.

DMX

Wiring Guidelines & Diagrams

OPTION 2 **DMX WALL SWITCH / WALL MOUNT WITH DMX DRIVER**

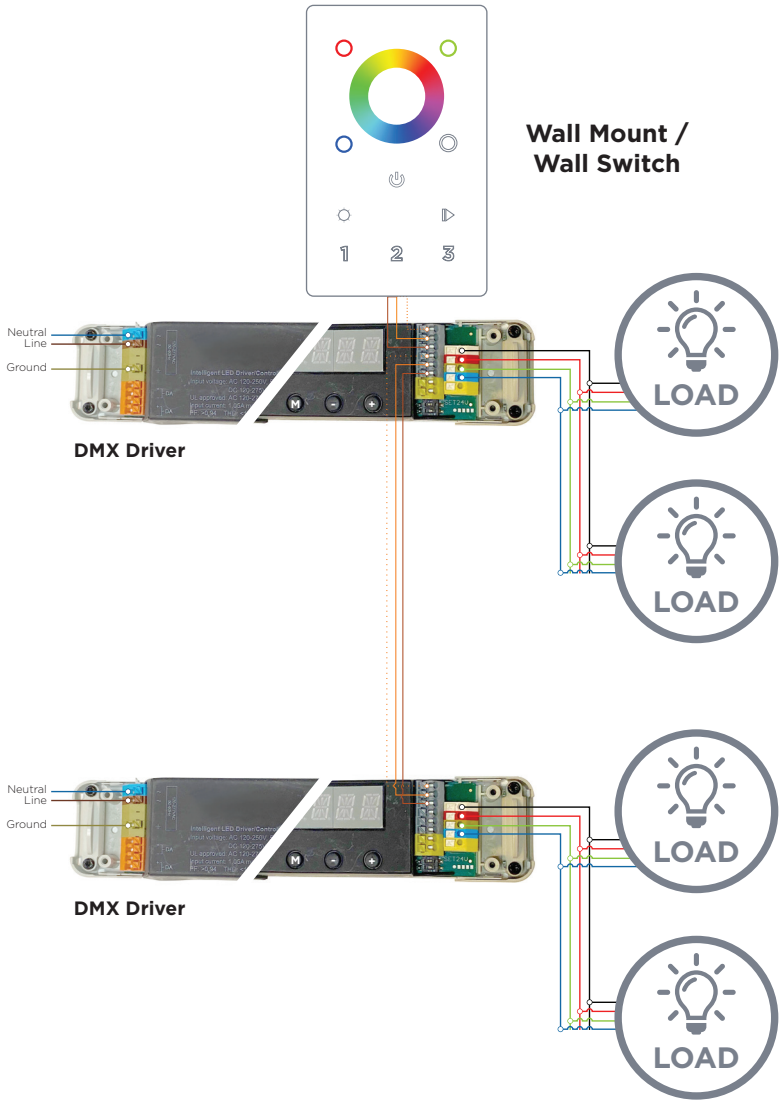

- Integrated driver and DMX decoder
- 12VDC or 24VDC Settable configuration
- Daisy chain topology for connecting multiple DMX LED drivers

301 Thor Place, Brea, CA 92821 | **tel** (714) 256-2111 | **fax** (714) 256-2118 | sales@ledconn.com | **www.ledconn.com**
Specifications are subject to change without notice. © 2023 LEDCON CORP. All Rights Reserved.

DALI

Control System Configuration

DALI is a bi-directional control protocol that facilitates two-way communication to and from devices. The two-way communication allows devices on the control line to report a fault or respond to status inquiries. Additional to dimming control, DALI devices can be assigned individual address that enable individual or group device control. Like 0-10V wiring, DALI control requires an additional pair wires for power and data.

Features

ADVANCED		HARD WIRED	DALI	DYNAMIC	$$$
Advanced	**Scalable**	**Hardwired**	**DALI**	**Programmable**	**Investment**

INTERFACE	+	POWER	+	CONTROLS		+	COMPATIBLE LOAD/LIGHT SOURCE
				MAIN	RESPONDER		*Please confirm custom lighting compatibility with LEDCONN beforehand*
Pick one		*Pick one*		*Pick one*	*Pick one*		*Pick your load / light source*
Computer with DALI Software		DC12V DC24V / DALI Driver		DALI Controller Provided by Others	N/A		Select the compatible lighting product based on the recommendations on the Load Compatibility table on p.25.

301 Thor Place, Brea, CA 92821 | **tel** (714) 256-2111 | **fax** (714) 256-2118 | sales@ledconn.com | **www.ledconn.com**
Specifications are subject to change without notice. © 2023 LEDCON CORP. All Rights Reserved.

DALI

Wiring Guidelines & Diagrams

DALI CONTROL

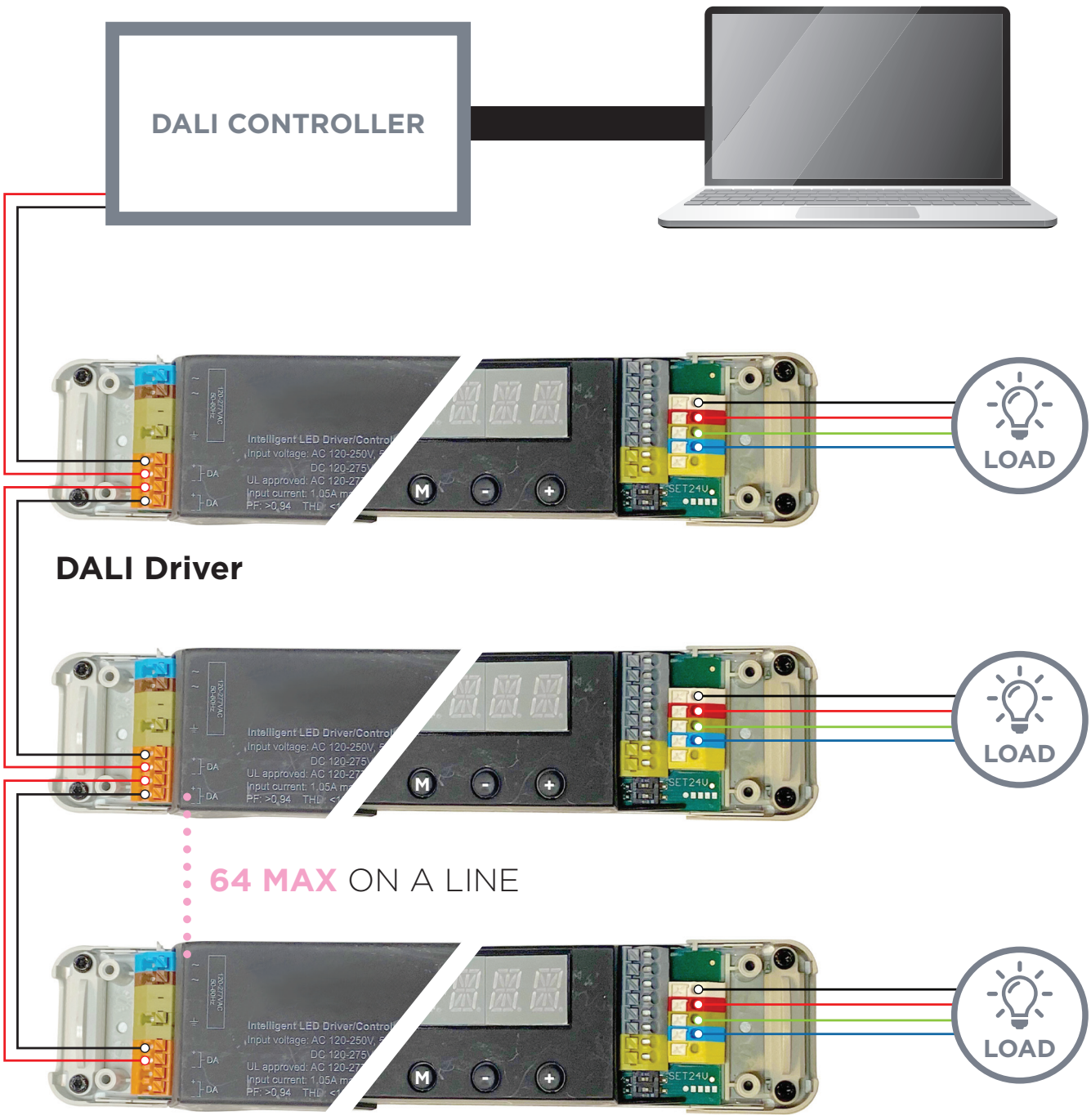

- Simple device reconfiguration through software programming.
- Fault notification and status confirmation
- Facilitates scalable and flexible lighting networks
- DALI control inputs are polarity independent

301 Thor Place, Brea, CA 92821 | **tel** (714) 256-2111 | **fax** (714) 256-2118 | sales@ledconn.com | **www.ledconn.com**
Specifications are subject to change without notice. © 2023 LEDCON CORP. All Rights Reserved.

HOME/BUILDING CONTROL

Control System Configuration

The following Home or building control solutions are designed to integrate several control sectors including lighting, audio visual, and HVAC systems.

Processors are required for whole home or building control integration. The processor provides large scale capabilities by integrating control and communication links between a multitude of system components. Multiple processors may be required depending on project size.

Each processor contains 2 control links which can integrate the following system component quantities:

- **16 power interfaces or panels**
- **99 wired or wireless devices**

Features

Advanced **Scalable** **Hardwired** **DMX** **Investment**

LEDCONN product offering is limited to the LED drivers, DMX decoders, and LED load.
All other components in the home and building control system shown are for reference only and sold by others.
Please consult local sales representative agency for total system integration.

301 Thor Place, Brea, CA 92821 | **tel** (714) 256-2111 | **fax** (714) 256-2118 | sales@ledconn.com | **www.ledconn.com**
Specifications are subject to change without notice. © 2023 LEDCON CORP. All Rights Reserved.

HOME/BUILDING CONTROL

Control System Configuration

SINGLE OR MULTI-ROOM CONTROL WITH DMX DECODER

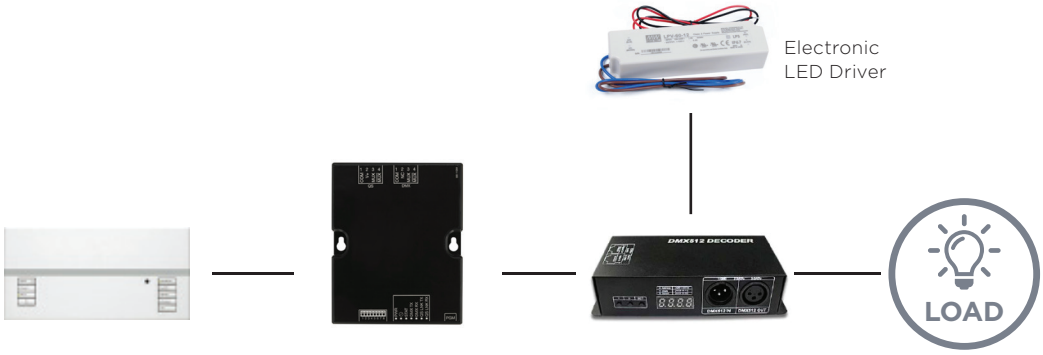

WHOLE HOME OR BUILDING CONTROL WITH DMX DECODER

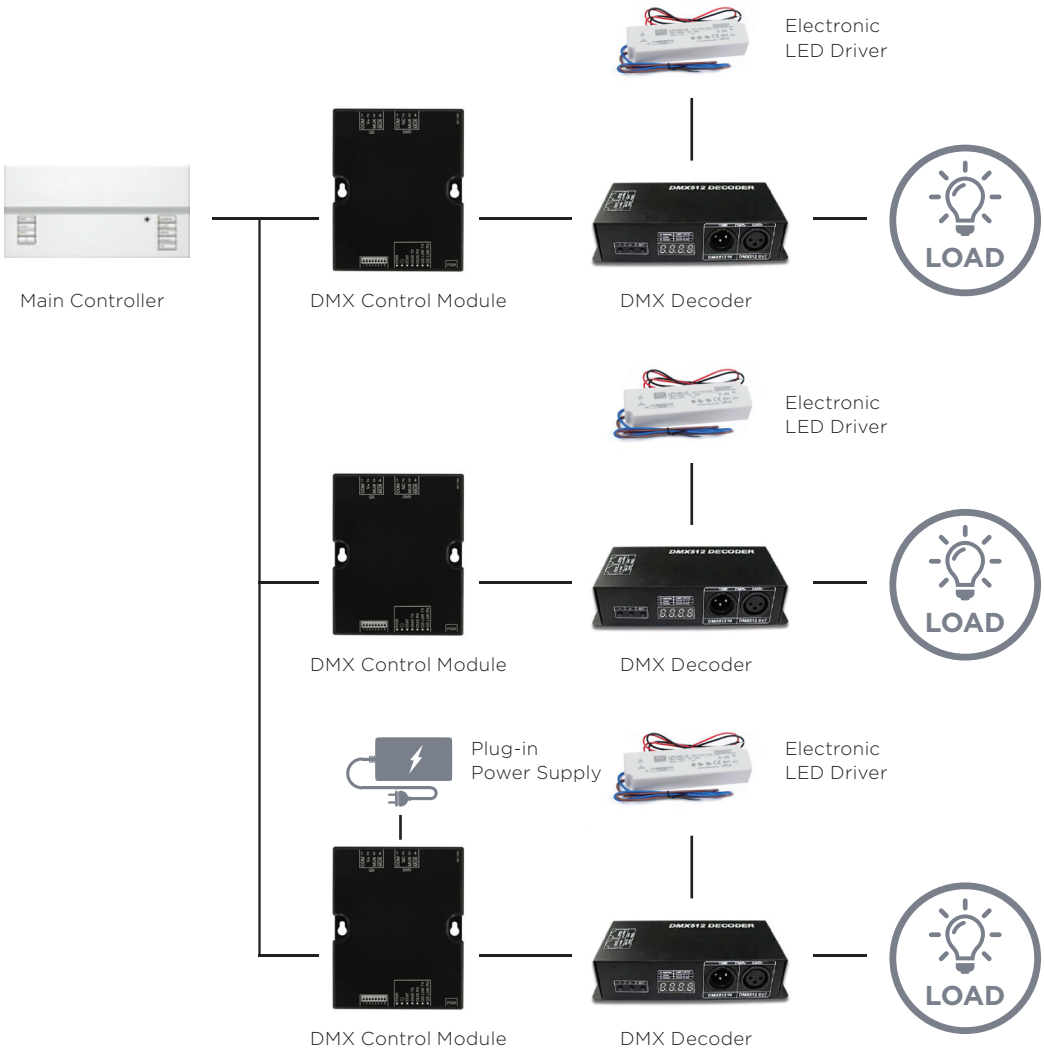

301 Thor Place, Brea, CA 92821 | **tel** (714) 256-2111 | **fax** (714) 256-2118 | sales@ledconn.com | **www.ledconn.com**
Specifications are subject to change without notice. © 2023 LEDCON CORP. All Rights Reserved.

HOME/BUILDING CONTROL

Control System Configuration

SINGLE OR MULTI-ROOM CONTROL WITH DMX DRIVER

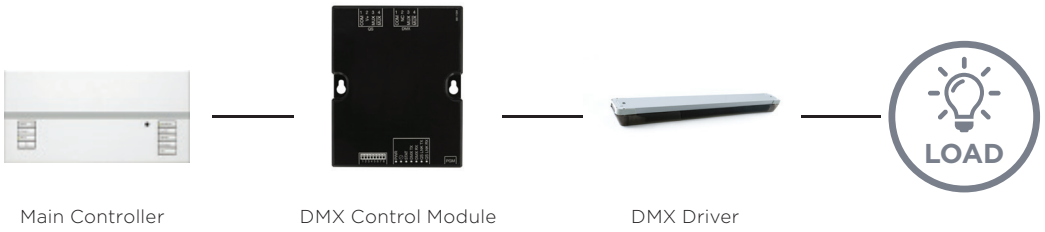

WHOLE HOME OR BUILDING CONTROL WITH DMX DRIVER

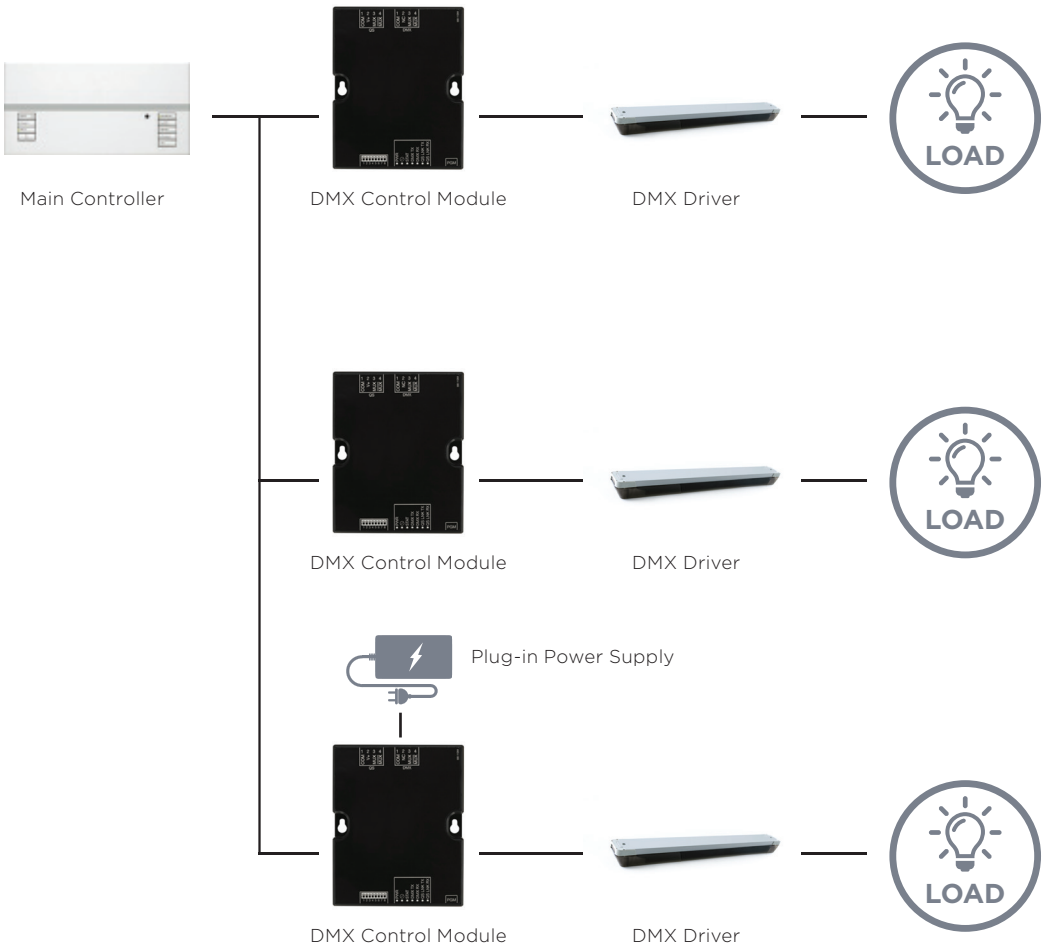

301 Thor Place, Brea, CA 92821 | **tel** (714) 256-2111 | **fax** (714) 256-2118 | sales@ledconn.com | **www.ledconn.com**
Specifications are subject to change without notice. © 2023 LEDCON CORP. All Rights Reserved.

LOAD COMPATIBILITY

Compatible Load/Light Sources: RGB

The table below shows which of our RGB light sources are compatible with the drivers and control systems indicated in this guide. *Please always confirm custom lighting compatibility with the LEDCONN team beforehand.*

BACKLIGHTING

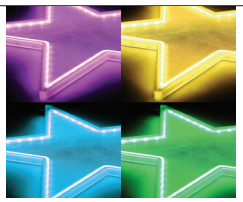

LUXFIT
RGB

LINEAR

LUXLINE
RGB

LUXLINEAR
Normal 1715
Low 1707
Slim 1008
Corner 1919
Round 2019
Flat 1408M
Square 1513M

LUXNEON
RGB

301 Thor Place, Brea, CA 92821 | **tel** (714) 256-2111 | **fax** (714) 256-2118 | sales@ledconn.com | **www.ledconn.com**
Specifications are subject to change without notice. © 2023 LEDCON CORP. All Rights Reserved.

AVAILABLE DRIVERS & CONTROLS FOR RGB

PRODUCT AVAILABILITY

Available Drivers & Controls

CONTROLS **RF, WIFI, TOUCH DIAL, & DMX**

ENVIRONMENT	Indoor
CONNECTION TYPE	Pin Connector or Hardwire

CONTROLS **RF, WIFI, & TOUCH DIAL**

PRODUCT	P/N	NAME	# OF CHANNELS	INPUT VOLTAGE	DIMENSIONS	MAX LOAD PER CHANNEL	CONNECTION TYPE	OPERATING TEMPERATURE
	ZCTL2	RGB Mini RF Controller	3	5-24VDC	1.60" X 0.50" X 0.20" 41mm X 13mm X 5mm	2A/CH	4-Pin Connector	-4°F - +140°F -20°C - +60°C
	ZCTL-WIFI	RGB Simple Wifi Controller	3	5-24VDC	2" X 1" X 0.40" 54mm X 23mm X 12mm	2A/CH	5-Pin Connector	-4°F - +140°F -20°C - +60°C
	ZCTWIFI104	4-In-1 Wifi Controller	4	*12V* 144W *24V* 288W	5.00" X 3.00" X 1.65" 127mm X 73mm X 42mm	3A/CH	Hardwire	-22°F - +122°F -30°C - +50°C
	ZDMRCVR45A	4-In-1 Wifi Responder	4	12-24VDC	6.89" X 1.77" X 1.18" 175mm X 45mm X 30mm	5A/CH	Hardwire	-4°F - +122°F -20°C - +50°C
	ZDMLDRF	RF Controller	3	12-24VDC	4" X 2.50" X 1.18" 102.5mm X 65mm X 30mm	4A/CH	Hardwire	-4°F - +140°F -20°C - +60°C
	ZDMRGBA4	RF Amplifier	3	12-24VDC	4" X 2.50" X 1.18" 102.5mm X 65mm X 30mm	6A/CH	Hardwire	-4°F - +140°F -20°C - +60°C
	ZDMM33A	RGB Touch Dial Controller	3	12-24VDC	5.31" X 1.18" X 0.79" 135mm X 30mm X 20mm	3A/CH	Hardwire	-22°F - +131°F -30°C - +55°C

CONTROLS **DMX**

PRODUCT	P/N	NAME	# OF CHANNELS	INPUT VOLTAGE	OUTPUT POWER	DIMENSIONS	MAX LOAD PER CHANNEL	CONNECTION TYPE	OPERATING TEMPERATURE
	ZCTDMXU9	DMX Controller	N/A	5-5.5VDC	N/A	3.11" X 3.62" X 1.69" 79mm X 92mm X 43mm	N/A	XLR3	-4°F - +140°F -20°C - +60°C
	ZDMDMX512-XLR-3	DMX Decoder	3	12-24VDC	*12V* 144W *24V* 288W	5.77" X 2.60" X 1.59" 146.5mm X 66mm X 40.5mm	4A/CH	Hardwire	-4°F - +140°F -20°C - +60°C
	ZDMDMX512-XLR-4	DMX Decoder	4	12-24VDC	*12V* 192W *24V* 384W	5.77" X 2.60" X 1.59" 146.5mm X 66mm X 40.5mm	4A/CH	Hardwire	-4°F - +140°F -20°C - +60°C

301 Thor Place, Brea, CA 92821 | **tel** (714) 256-2111 | **fax** (714) 256-2118 | sales@ledconn.com | **www.ledconn.com**
Specifications are subject to change without notice. © 2023 LEDCON CORP. All Rights Reserved.

PRODUCT AVAILABILITY

Available Drivers & Controls

UL CLASS 2 POWER SUPPLIES **DC PLUG-IN POWER ADAPTERS**

ENVIRONMENT	Indoor
INPUT VOLTAGE	100-240VAC
OUTPUT VOLTAGE	12VDC / 24VDC
CONNECTION TYPE	Plug-in / DC barrel plug

CERTIFICATION

c UL us LISTED

PRODUCT	P/N	OUTPUT VOLTAGE	INPUT VOLTAGE	OUTPUT POWER	DIMENSIONS	UL
	ZTREB12V1AN	12VDC		12W	2.90" X 1.09" X 1.67" 73.7mm X 27.7mm X 42.4mm	
	ZTREB12V2AN	12VDC		24W	3.54" X 1.85" X 1.17" 89.9mm X 46.7mm X 29.7mm	
	ZTREB12V3AN	12VDC		36W	3.54" X 1.85" X 1.17" 89.9mm X 46.7mm X 29.7mm	
	ZTREB12V4AN	12VDC		48W	4.70" X 2.05" X 1.32" 119.4mm X 52.1mm X 33.5mm	
	ZTREB12V5AN2	12VDC	100-240VAC	60W	4.70" X 2.05" X 1.32" 119.4mm X 52.1mm X 33.5mm	UL Listed
	ZTREB24V1AN	24VDC		24W	3.54" X 1.85" X 1.17" 89.9mm X 46.7mm X 29.7mm	
	ZTREB24V2AN	24VDC		48W	4.70" X 2.05" X 1.32" 119.4mm X 52.1mm X 33.5mm	
	ZTREB24V3AN	24VDC		72W	4.65" X 2.34" X 1.45" 118.1mm X 59.4mm X 36.8 mm	
	ZTREB24V4AN	24VDC		96W	6.75" X 2.82" X 1.56" 171.5mm X 71.6mm X 39.6mm	

301 Thor Place, Brea, CA 92821 | **tel** (714) 256-2111 | **fax** (714) 256-2118 | sales@ledconn.com | **www.ledconn.com**
Specifications are subject to change without notice. © 2023 LEDCON CORP. All Rights Reserved.

PRODUCT AVAILABILITY

Available Drivers & Controls

UL CLASS 2 POWER SUPPLIES **REGULAR ELECTRONIC LED DRIVERS**

ENVIRONMENT	Indoor
INPUT VOLTAGE	90-265VAC / 90-295VAC / 90-305VAC
OUTPUT VOLTAGE	12VDC / 24VDC
CONNECTION TYPE	Hardwire

CERTIFICATION

*Safe for use in indoor and outdoor environments.

PRODUCT	P/N	OUTPUT VOLTAGE	INPUT VOLTAGE	OUTPUT POWER	DIMENSIONS	UL
	ZTREM12V60WV*	12VDC	90-264VAC	60W	6.40" X 1.67" X 1.26" 162.5mm X 42.5mm X 32mm	UL Recognized
	ZTREM12V60WF*	12VDC	90-305VAC		6.40" X 1.69" X 1.26" 162.5mm X 43mm X 32mm	
	ZTREM24V60WV*	24VDC	90-264VAC		6.40" X 1.67" X 1.26" 162.5mm X 42.5mm X 32mm	
	ZTREM24V60WF*	24VDC	90-305VAC		6.40" X 1.69" X 1.26" 162.5mm X 43mm X 32mm	
	ZTREM24V90WF*	24VDC	90-305VAC	90W	6.34" X 2.40" X 1.42" 161mm X 61mm X 36mm	
	ZTREM24V100WPLN	24VDC	90-295VAC	96W	7.87" X 2.78" X 1.38" 200mm X 70.5 X 35mm	
	ZTREM24V320WHLG*	24VDC	90-305VAC	320W	8.87" X 3.54" X 1.72" 225.2mm X 90mm X 43.8mm	
	ZTREM24V80WHLG*	24VDC	90-305VAC	81.6W	7.70" X 2.42" X 1.53" 195.6mm X 61.5mm X 38.8 mm	UL Listed
	ZTREA24V99WANP-UL*	24VDC	90-305VAC	100W	7.80" X 2.76" X 1.22" 198mm X 70mm X 31mm	

301 Thor Place, Brea, CA 92821 | **tel** (714) 256-2111 | **fax** (714) 256-2118 | sales@ledconn.com | **www.ledconn.com**
Specifications are subject to change without notice. © 2023 LEDCON CORP. All Rights Reserved.

PRODUCT AVAILABILITY

Available Drivers & Controls

UL CLASS 2 POWER SUPPLIES **DIMMABLE ELECTRONIC LED DRIVERS: 0-10V**

ENVIRONMENT	Indoor	**CONTROL**	**CERTIFICATION**
INPUT VOLTAGE	120-277VAC	0-10V	c UL us LISTED, c RU us
OUTPUT VOLTAGE	24VDC		
CONNECTION TYPE	Hardwire		

**1% dimming power supply is available upon request.*

PRODUCT	P/N	OUTPUT VOLTAGE	INPUT VOLTAGE	OUTPUT POWER	DIMENSIONS	UL
	ZTREA24V100W277-H	24VDC	120-277VAC	96W	14.21" x 1.18" x 0.83" 361mm x 30mm x 21mm	UL Recognized
	ZTREM24V96W277-J	24VDC	120-277VAC	96W	12.10" x 11.40" x 1.40" 307.9mm x 290.5mm x 35mm	UL Listed
	ZTREM24V96W277- NO J	24VDC	120-277VAC	96W	7.5" x 6.80" x 1.40" 191.6mm x 172mm x 35mm	UL Listed

UL CLASS 2 POWER SUPPLIES **DIMMABLE ELECTRONIC LED DRIVERS: DMX/DALI**

ENVIRONMENT	Indoor	**CONTROL**	**CERTIFICATION**
INPUT VOLTAGE	120/277VAC	DMX, DALI	c RU us
OUTPUT VOLTAGE	12VDC / 24VDC		
CONNECTION TYPE	Hardwire		

PRODUCT	P/N	OUTPUT VOLTAGE	INPUT VOLTAGE	OUTPUT POWER	DIMENSIONS	UL
	ZTREE1224V100W	12VDC or 24VDC (select output voltage with DIP switch)	120-277VAC	96W	15.27" X 1.65" X 1.18" 388mm X 42mm X 30mm	UL Recognized

301 Thor Place, Brea, CA 92821 | **tel** (714) 256-2111 | **fax** (714) 256-2118 | sales@ledconn.com | **www.ledconn.com**
Specifications are subject to change without notice. © 2023 LEDCON CORP. All Rights Reserved.

ELECTRICAL 101

ELECTRICAL 101

Glossary

We understand that lighting & controls can be confusing. That's why we're so passionate about providing quality consultation and educational resources to better serve you. For further assistance, reach out to any of our in-house LEDCONN lighting gurus!

0-10V

0-10V dimming continues to be an effective method of dimming. A 0-10V dimmer operates by varying a DC voltage control signal between 10V and 0VDC. Where the light fixture is at maximum output when the unit is set to 10V and at minimum output when the unit is set at 0V.

0-10V offers versatility for retrofit or new installations. Existing 0-10V fluorescent systems can be directly retrofitted to newer 0-10V LED systems. 0-10V systems are intuitive, does not require specialized software or programming knowledge.

Amplifier

An electronic device that increases load capacity and extends the signal of a LED system. This is done by replicating the signal of the primary LED run to power the secondary LED runs.

Brain

The primary device in the system that handles and distributes commands to sub-controllers, sensors, control interfaces, and lighting loads.

Channel

Typically used for multi-colored LEDs such as Tunable White, RGB, and RGBW, a channel refers to the color of an LED output. With a controller, the user will have the ability to control the output of the channel(s) to generate custom color combinations.

Class 2

Class 2 is a specification by the NEC (National Electric Code) that standardizes requirements for power supplies and electrical wiring. These NEC requirements encompass the installation of electrical conductors and equipment within or on buildings as well as define Class 2 circuits, limiting the maximum voltage and current. For electrical work involving low voltage and requiring permits, local and national jurisdictions base their permit approvals on these standards. Class 2 circuits are restricted to 100 Watts, 60VDC, or 5A per circuit. This requires power supply limitations of 60W for 12VDC and 96W for 24VDC for compliance with Class 2 requirements. The limited output power of the class 2 circuit is understood as low risk for fires and electrical shock which in turn facilitates lower cost wiring practices to be utilized.

Connection Terminology

Gender — The gender of a connector is referenced to whether the connector plugs in (Male) or is plugged into (Female).

Polarity — Describes the positive and negative orientation of the electronic device. DC connections can be connected in only one orientation, positive to positive and negative to negative. Connectors typically contain identifiers (+)/(-) to assist in the correct polarity mating.

Connector — Connectors are used to join sections of a system together and are available in various packages ranging from DC barrels to screw terminals.

Constant Current

Constant current luminaires require a constant current to be supplied from the driver. For these lights the current is fixed by the driver but the voltage may vary. Constant current lights are ALWAYS wired in series. For industrial lighting, a constant current system is more common; however, a system redesign may be required to account for changes that may occur in the future.

Constant Voltage

Constant voltage luminaires require a steady voltage to be supplied from the driver. For these lights the voltage is fixed by the driver but the current may vary. Constant voltage lights are ALWAYS wired in parallel. Constant voltage systems feature better flexibility in comparison to constant current systems.

Most of LEDCONN's products are constant voltage systems

Control

A process that converts a user input into a desired fixture response, generally through a remote controller, smart device, or programming software.

Decoder

An electronic device used to translate digital DMX signals from a control source into an analog signal used to control LED fixtures.

301 Thor Place, Brea, CA 92821 | **tel** (714) 256-2111 | **fax** (714) 256-2118 | sales@ledconn.com | **www.ledconn.com**
Specifications are subject to change without notice. © 2023 LEDCON CORP. All Rights Reserved.

ELECTRICAL 101

Glossary

Dimmer	An electronic device that is connected to light fixtures and adjusts their brightness.
DMX	DMX is a control protocol that enables the end-user to control lighting fixtures from a single source. Since DMX is a digital signal it requires additional components in order to operate, including a computer interfacing console or DMX console and a DMX decoder or DMX enabled LED driver.
DMX Terminator	DMX terminators reduce noise in the DMX transmission line and improves the reliability of the fixtures. DMX terminators are recommended when large amounts of DMX fixtures are on a single DMX line and connected to the last fixture in the line.
Driver	Drivers are electronic devices that convert electricity from high (AC) voltage to low (DC) voltage, generally from 120V to 12V or 24V.
Electronic Low Voltage Dimming (ELV)	ELV dimming alters the trailing end of the incoming supply voltage to the driver in order to dim the LED fixture.
Input Voltage	Input voltage refers to the voltage required to supply the system.
Interface	The user interface changes the system modes or settings in order to alter the lighting effects.
IR	Infrared (IR) Remotes transmit pulses of light that relay user input commands to a responder.
Load	The part of a circuit that consumes electricity, usually the light sources.
Low Voltage Dimming	When dimming a low-voltage fixture, the dimmer controls the line voltage (VAC) input to the transformer powering the low-voltage lights. There are two types of transformers manufactured for low-voltage lighting: Magnetic (core and coil) – MLV and Electronic (solid-state) - ELV.
Low Voltage Transformer	Low Voltage Transformers are electronic devices that convert electricity from high voltage to low voltage, generally from 120V to 12V or 24V.
Magnetic Low Voltage Dimming (MLV)	MLV dimming alters the leading end of the incoming supply voltage to the driver in order to dim the LED fixture.
Main Controller	The main controller is an electronic device that processes commands to responders.
Max Load	The maximum wattage that the driver is designed to support.
Output Power	The power supplied by the LED driver.
Plug-in Adapter	Power supply with integrated output connector.
Pre-Set Programming	The default settings or programs that are built into the control system by the control manufacturers.
Programmable	Capability of accepting defined user input commands.
PWM	PWM dimming dims the LED by switching the low-voltage signal on and off at high frequencies where the duration of the off time determines the dim level.
Responder	Responders receive and process user input command signals from a number of sources and outputs the user input command to the LED. They are an electronic device that processes commands from a main controller.
RF Remote	Radio Frequency Remotes transmit radio wave signals that relays user input commands to a responder.
RGB	RGB is a combination of three LEDs (red, green, and blue) in a single package. RGB LEDs combine the three colors to produce different hues of light by adjusting the brightness of each of the three LEDs.
RGB+W	RGB + W is a combination of RGB LEDs (red, green, blue) with a dedicated white LED. RGB+W LEDs are capable of combining the three RGB colors and white to produce various hues or illuminating a space with white light.
Single-Pole	Single pole switches control one or more light fixtures from a single location.

Specifications are subject to change without notice. © 2023 LEDCON CORP. All Rights Reserved.

ELECTRICAL 101

Glossary

Static White	White LEDs that maintain the same color temperature.
Touch Dial	A visual dial display interface where the end user has the ability to control the system through touch gestures.
Tunable White	Tunable White is the combination of two LEDs (warm white, and cool white) where the warm and cool white LEDs are positioned adjacent to each other. Tunable White LEDs combine the two colors to facilitate the color temperature range of 2400K to 6500K.
UL	UL is the abbreviation for Underwriters Laboratories, an organization that is a world leader in product safety testing and certification. UL is one of several companies approved to perform safety testing by the U.S. federal agency Occupational Safety and Health Administration (OSHA).
UL Listed/ UL Recognized	The UL Listed and UL Recognized Marks indicate that a product has been tested and has passed the specific requirement in one or more categories for product safety by the Underwriters Laboratories (UL). UL Mark on a product assures the product meets the minimum safety standard. • Keep in mind that UL Marks may not always be mandatory but are often required for certain specific applications, installations, and inspections. • Most of LEDCONN's lighting solutions are UL certified products.
Wall Mount/Wall Switch	Wall switches are electronic devices that are used to turn lights on & off to reduce or increase brightness levels.
Wiring Diagram	Wiring diagrams are visual representations of a circuit connection or layouts of an electrical system.

301 Thor Place, Brea, CA 92821 | **tel** (714) 256-2111 | **fax** (714) 256-2118 | sales@ledconn.com | **www.ledconn.com**
Specifications are subject to change without notice. © 2023 LEDCON CORP. All Rights Reserved.

ELECTRICAL 101

FAQs

Below are answers to some frequently asked questions about electrical fundamentals. For further assistance with understanding these or any other related electrical concepts, reach out to our team of lighting gurus at any time.

Voltage Drop

What is voltage drop?

Voltage drop is an occurrence where the Voltage gradually drops as it travels along a conductor (cable or LED strip) due to resistance in the line. The longer the conductor length, the greater the voltage drop. Voltage drop impacts the LED brightness resulting in the LED being dimmed.

How can I minimize voltage drop?

1. Minimize wire length.
2. Utilize adeqately sized wire between the LED driver and LED strip. Larger wires have less resistance and can carry power more efficiently
3. Minimize LED strip length, split the run into multiple sections and have each section wired directly back to the LED driver.

How can I determine an appropriate wire gauge?

1. Determine the total length of wire required from the LED driver to the LED strip.
2. Determine the Voltage, Current, and Wattage of the LED strip. The Voltage should be specified by the manufacturer on the specification sheet or on the LED strips themselves. To find the Wattage, multiply the provided wattage per foot by the length of the LED strip. To find the Current, divide the calculated Wattage by the Voltage of the LED strip.
3. Reference the tables below matching the calculated Current and wire length to determine the appropriate wire gauge.

12V Wire Gauge Sizing Chart

Wire Gauge	**12W** *1A*	**24W** *2A*	**36W** *3A*	**48W** *4A*	**60W** *5A*
24 AWG	9.4 ft	4.7 ft	3.1 ft	2.3 ft	1.9 ft
22 AWG	14.9 ft	7.5 ft	5.0 ft	3.7 ft	3.0 ft
20 AWG	23.8 ft	11.9 ft	7.9 ft	5.9 ft	4.8 ft
18 AWG	37.8 ft	18.9 ft	12.6 ft	9.4 ft	7.6 ft
16 AWG	60.0 ft	30.0 ft	20.0 ft	15.0 ft	12.0 ft
14 AWG	95.5 ft	47.8 ft	31.8 ft	24.0 ft	19.0 ft
12 AWG	152.0 ft	76.0 ft	50.6 ft	38.0 ft	30.4 ft
10 AWG	241.5 ft	120.7 ft	80.5 ft	60.4 ft	48.3 ft

24V Wire Gauge Sizing Chart

Wire Gauge	**24W** *1A*	**48W** *2A*	**72W** *3A*	**96W** *4A*
24 AWG	18.8 ft	9.4 ft	6.3 ft	4.7 ft
22 AWG	30.0 ft	15.0 ft	10.0 ft	7.5 ft
20 AWG	47.5 ft	23.8 ft	15.8 ft	11.9 ft
18 AWG	75.5 ft	37.8 ft	25.2 ft	18.9 ft
16 AWG	120.1 ft	60.1 ft	40.0 ft	30.0 ft
14 AWG	191.0 ft	95.5 ft	63.7 ft	47.8 ft
12 AWG	303.7 ft	151.9 ft	101.2 ft	75.9 ft
10 AWG	482.9 ft	241.5 ft	161.0 ft	120.7 ft

301 Thor Place, Brea, CA 92821 | **tel** (714) 256-2111 | **fax** (714) 256-2118 | sales@ledconn.com | **www.ledconn.com**
Specifications are subject to change without notice. © 2023 LEDCON CORP. All Rights Reserved.

ELECTRICAL 101

FAQs

Dimming

Are my LEDs dimmable?

The LED by itself is not dimmable; a dimmable LED driver must be paired with the LED to enable dimming. The type of dimmer switch you use must also match the type of dimming.

What are the available dimming types?

There are 4 main types of dimming; phase dimming, PWM, 0-10V, and DMX.

1. Phase Dimming (MLV or ELV): Phase dimming systems dim the LED by altering the incoming supply voltage to the driver.

2. PWM Dimming: PWM dimming dims the LED by switching the low-voltage signal on and off at high frequencies where the duration of the off time determines the dim level.

3. 0-10V Dimming: 0-10V dimming dims the LED by sending a signal to the LED driver over an additional 2-wire control line. Note the control wires have polarities which must be kept in mind when wiring.

4. DMX: DMX is a digital control protocol that allows for control of individual fixtures utilizing a low voltage control signal. DMX utilizes PWM dimming technology to adjust the fixture brightness.

What are the benefits of each dimming type?

1. Phase dimming systems adjust the fixture dimming controls via the AC lines, simplifying the installation and wiring.

2. 0-10V and DMX dimming systems require additional control signals apart from the AC lines for dimming control. The additional control signals add complexity to the installation and wiring, but results in a greater system performance.

What are constant voltage drivers?

Constant Voltage Drivers vary the current to maintain a fixed (constant) voltage across a fixture.

What are the benefits of constant voltage drivers?

Constant Voltage Drivers ensure a fixed voltage across multiple fixtures connected in parallel. In a Constant Voltage fixture system the fixed voltage input reduces complexity in wiring and installation.

301 Thor Place, Brea, CA 92821 | **tel** (714) 256-2111 | **fax** (714) 256-2118 | sales@ledconn.com | **www.ledconn.com**
Specifications are subject to change without notice. © 2023 LEDCON CORP. All Rights Reserved.

CUSTOM LED LIGHTING SOLUTIONS

ARCHITECTURAL BACKLIGHTING
DISPLAY & FIXTURE LIGHTING
ILLUMINATED SIGNAGE
EXHIBIT LIGHTING

LEDCONN
— Be the FOCUS —

301 Thor Place, Brea, CA 92821
tel (714) 256-2111
fax (714) 256-2118
sales@ledconn.com
www.ledconn.com

© 2023 LEDCON CORP. All Rights Reserved.